DEO ATTACHED

B1 | 02.12.17 | ϕ0.93 WAS ϕ0.75

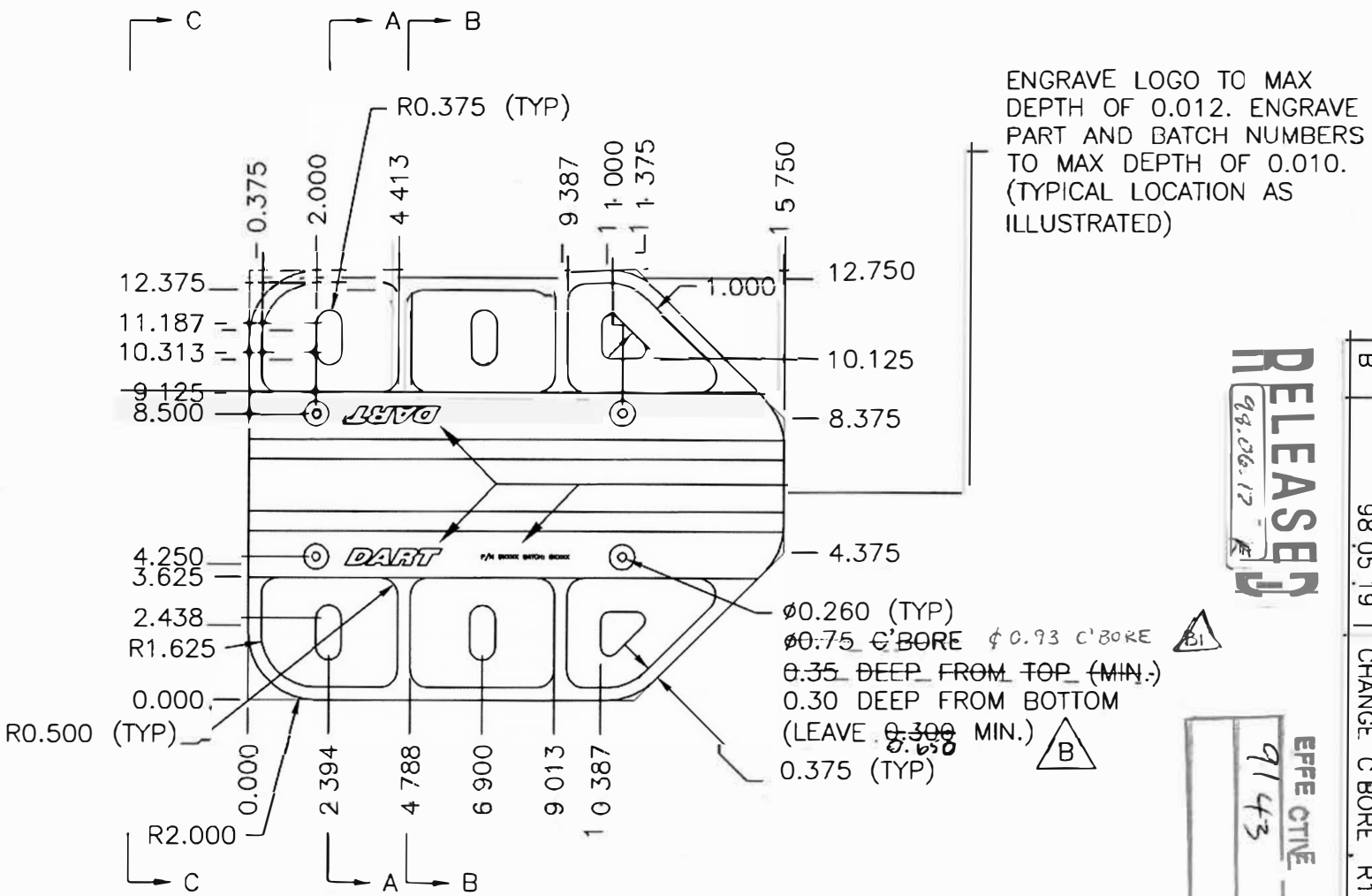

MATERIAL: UHMW BLACK PER SPEC CONTROL DRAWING D2689
1.00 THICK (MACHINE TO 0.950)

RELEASED 98.06.17

EFFECTIVE 9143

DEOs

DART

QA COPY ISSUED

DESIGN KE	DRAWN BY KE	DART AEROSPACE LTD HAWKESBURY, ONTARIO, CANADA	
CHECKED	APPROVED	DRAWING NO D2671	REV. B SHEET 1 OF 2
DATE 98.05.19		TITLE BEARPAW	SCALE 1:5
A	97.04.08	NEW ISSUE	
B	98.05.19	CHANGE C BORE, R1.58 WAS R1.50	

Copyright 1997 by DART AEROSPACE LTD

DEO ATTACHED

DART

QA COPY ISSUED

DESIGN	DRAWN BY	DART AEROSPACE LTD HAWKESBURY, ONTARIO, CANADA	
KE	KE		
CHECKED	APPROVED	DRAWING NO.	REV. B
		D2671	SHEET 2 OF 2
DATE		TITLE	SCALE
98.05.19		BEARPAW	1:4

RELEASED
98.06.17 KE

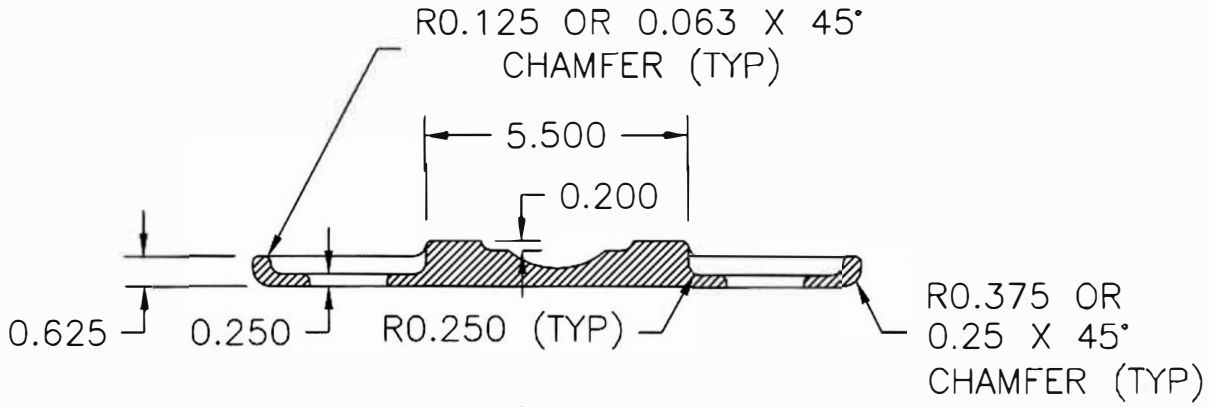

SECTION A–A

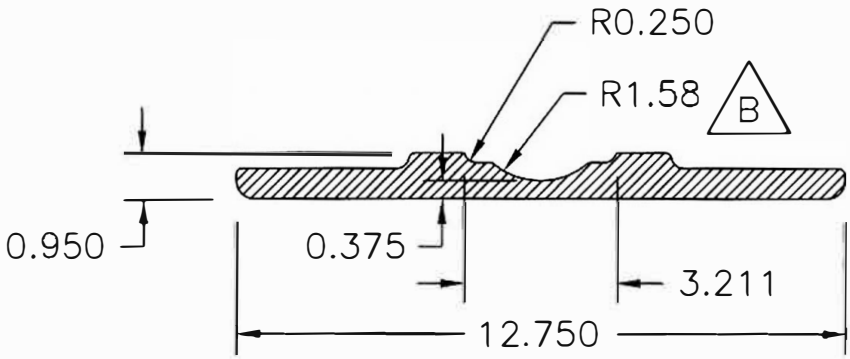

SECTION B–B

SECTION C–C

Copyright 1997 by DART AEROSPACE LTD

DESIGN	DRAWN BY	DART AEROSPACE LTD HAWKESBURY, ONTARIO, CANADA	
CHECKED RF	APPROVED	DRAWING NO. DEO 9143	REV. A SHEET 1 OF 1
DATE 99.03.03		TITLE BEARPAW COUNTERBORE	SCALE NTS
A	99.03.03	NEW ISSUE	

RELEASED
99.03.04 RE

DART ENGINEERING ORDER

TO AMEND THE FOLLOWING DRAWINGS:

D2432 REV F
D2435 REV E
D2521 REV G
D2671 REV B
D2672 REV B

REMOVE COUNTERBORE ON TOP SURFACE OF BEARPAW.

UPDATE HOLE CALLOUT AS FOLLOWS:

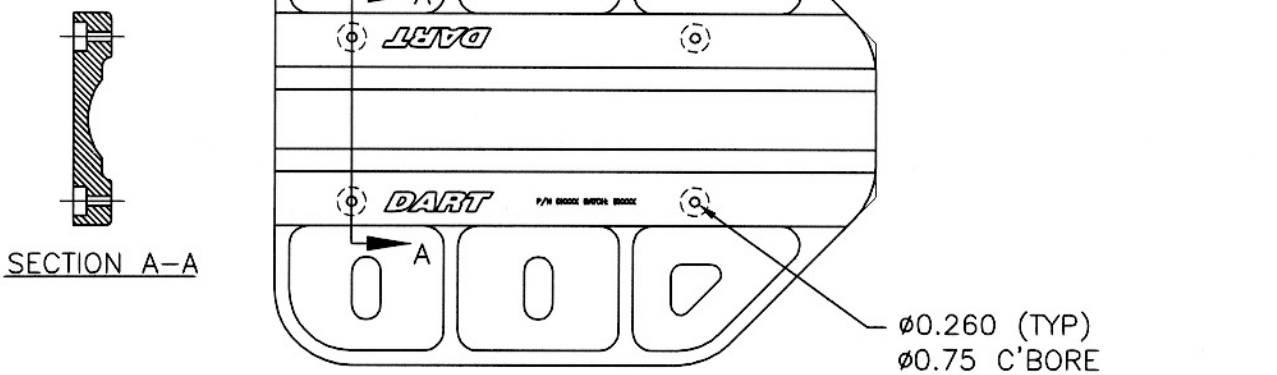

SECTION A–A

TYPICAL BEARPAW FOR
ILLUSTRATIVE PURPOSES ONLY

Copyright 1999 by DART AEROSPACE LTD